CNENGR116 - Fundamentals of Digital Electronics — Tutorial 3 (v2)

1. Assuming S1, R1, and Q are initially 0 and logic gates have a tiny non-zero delay, trace the behaviour of a level-sensitive SR latch shown in the figure below.

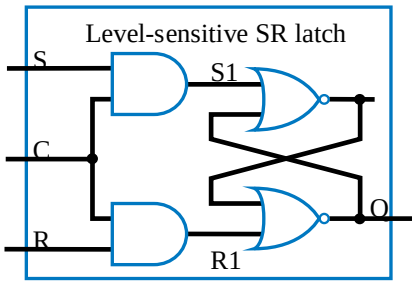

(a) Complete the timing diagram of S1, R1, and Q for the input patterns shown below. [2 marks]

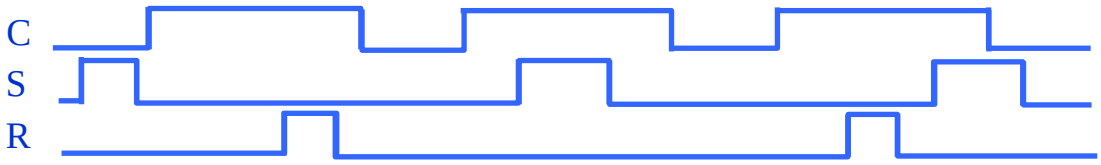

(b) Complete the timing diagram of S1, R1, and Q for the input patterns shown below. What is the main different of the timing diagram plotted here with respect to part (a). Explain how this behaviour can be avoided? [2 marks]

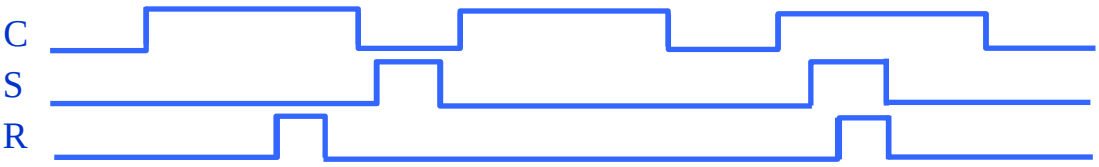

2. Given CLK and D signal below

(a) Determine the variation of the output Q as a function of time when D is the input to a D-Latch. Assume that the latch is in RESET state to start with. [2 marks]

(b) Do the same when D is the input to a D Flip-flop that triggers only on the rising edge of the CLK and compare the results. [2 marks]

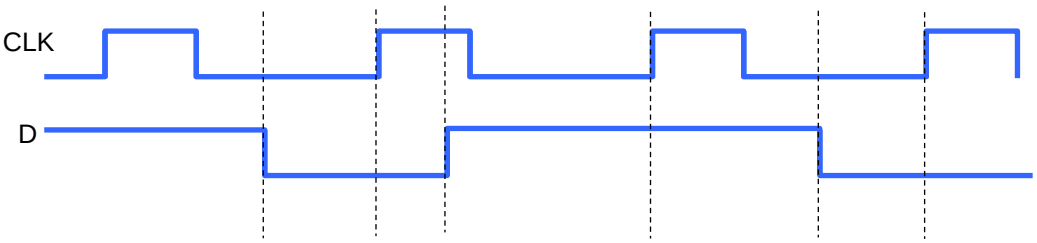

3. By analysing the 2-bit counter circuit shown below;

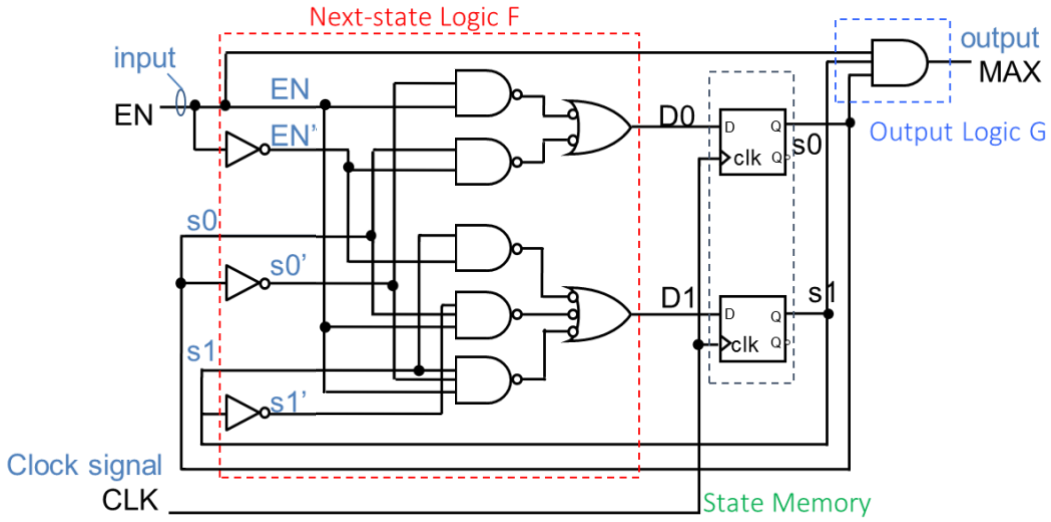

(a) Determine the state equation F (next states D0 and D1 as a function of current states s0 and s1 and input EN). [3 marks]

(b) Determine the output equation G (output MAX as a function of current states s0 and s1 and input EN). [2 marks]

(c) Having the functions F and G fill in the transition table below. [3 marks]

Present state s1 s0	Inputs EN	Next state D1 D0	Outputs MAX

4. For the JK flip-flop assuming J and K as inputs and Q as the output

(a) Fill in the transition table shown below. [2 marks]

Present state Q	Inputs J K	Next state Q*

(b) Draw the corresponding state diagram. [2 marks]

[TOTAL: 20 marks]